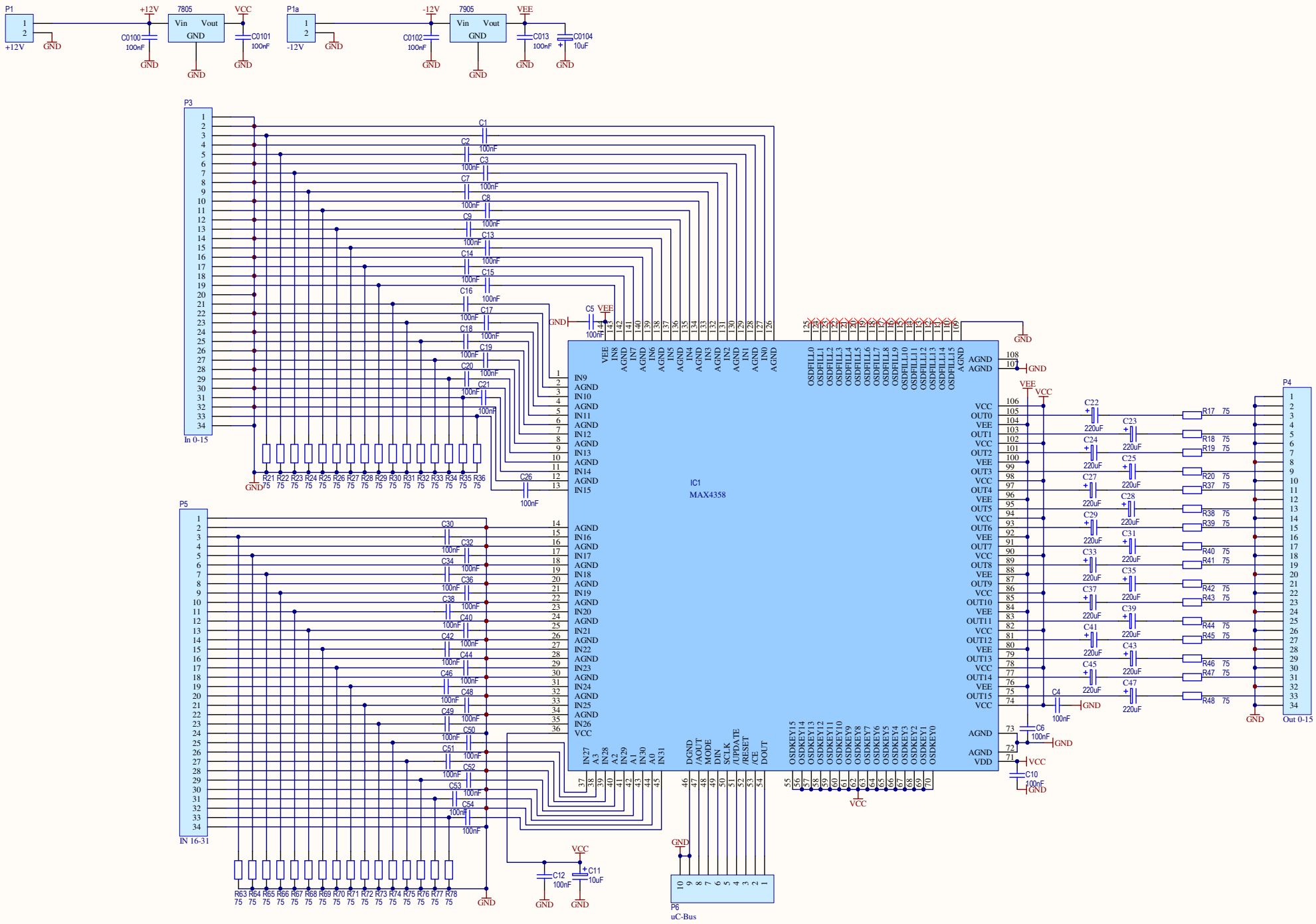

Projekt:

32x16 Video Kreuzschiene Max4358

Tomtom
DL1MFK

Datum: 08.01.2007
Uhrzeit: 23:00:38
Rev.: C

Datei: Videokreuzschiene 32x16_V3.SchDoc

Video Krenyschriene 32x16
DL1MFK 01/2007
Rev C
-8V
+8V

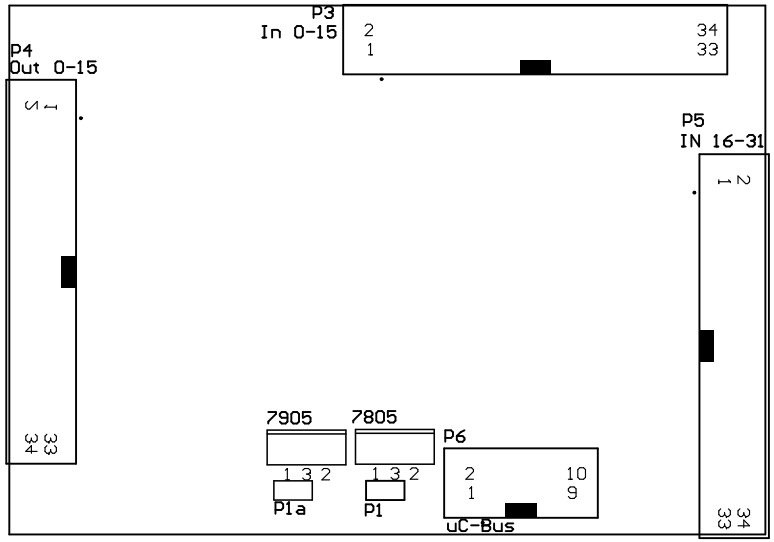
P3
In 0-15
2
1
34
33
P4
Out 0-15
1
5
33
34
P5
IN 16-31
2
1
34
33
7905
7805
1 3 2
1 3 2
P1a
P1
P6
2
1
10
9
uC-Bus

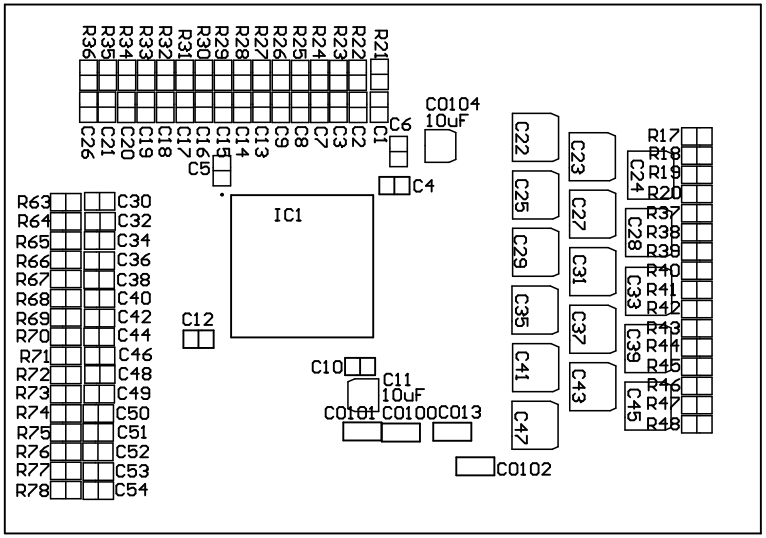
R36
R35
R34
R33
R32
R31
R30
R29
R28
R27
R26
R25
R24
R23
R22
R21
C26
C21
C20
C19
C18
C17
C16
C15
C14
C13
C9
C8
C7
C3
C2
C1
C6
C5
C4
C0104
10uF
IC1
C12
C10
C11
10uF
C0101
C0100
C013
C0102
R63
R64
R65
R66
R67
R68
R69
R70
R71
R72
R73
R74
R75
R76
R77
R78
C30
C32
C34
C36
C38
C40
C42
C44
C46
C48
C49
C50
C51
C52
C53
C54
C22
C25
C29
C35
C41
C47
C23
C27
C31
C37
C43
C24
C28
C33
C39
C45
R17
R18
R19
R20
R37
R38
R39
R40
R41
R42
R43
R44
R45
R46
R47
R48