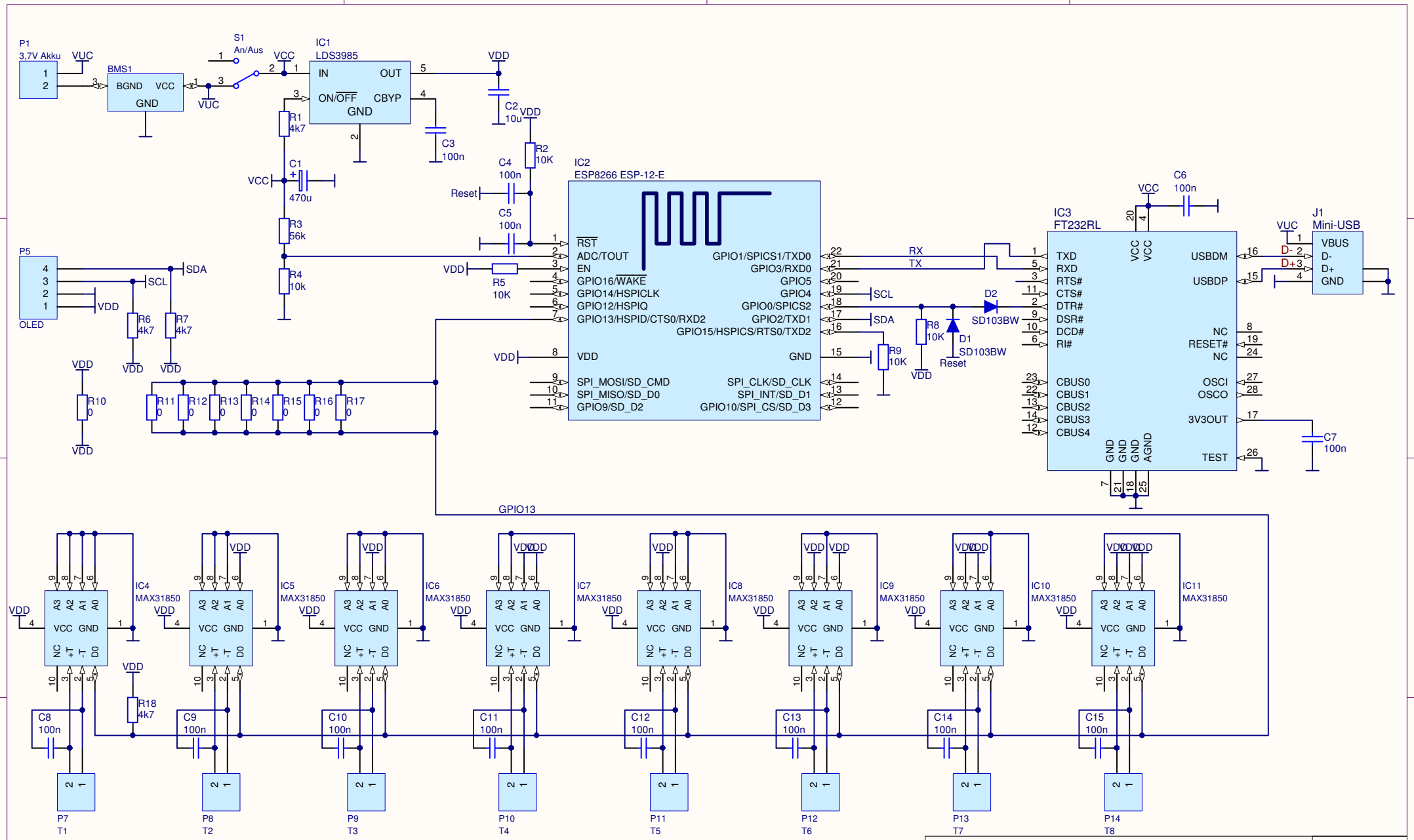

Projekt:

8-fach WLAN-Thermometer

Tomtom

DL1MFK

Datum : 04.10.2019
Uhrzeit : 12:39:19

Rev.:*

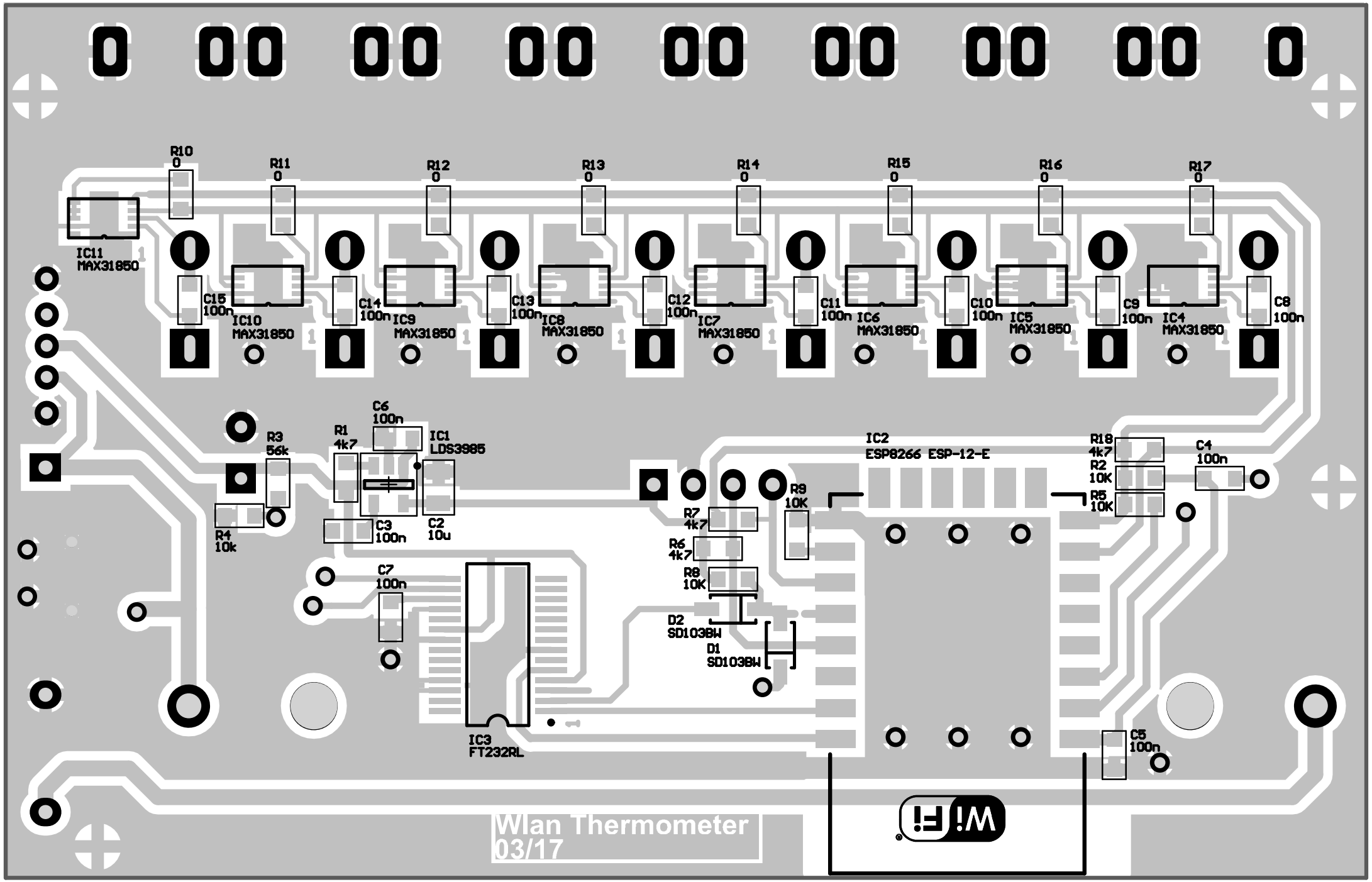
R10
0
R11
0
R12
0
R13
0
R14
0
R15
0
R16
0
R17
0
IC11
MAX31850
C15
100n
IC10
MAX31850
C14
100n
IC9
MAX31850
C13
100n
IC8
MAX31850
C12
100n
IC7
MAX31850
C11
100n
IC6
MAX31850
C10
100n
IC5
MAX31850
C9
100n
IC4
MAX31850
C8
100n
C6
100n
R3
56k
R1
4k7
IC1
LDS3985
R4
10k
C3
100n
C2
10u
C7
100n
IC3
FT232RL
R7
4k7
R6
4k7
R8
10K
R9
10K
D2
SD103BW
D1
SD103BW
IC2
ESP8266 ESP-12-E
R18
4k7
R2
10K
R5
10K
C4
100n
C5
100n
Wlan Thermometer
03/17

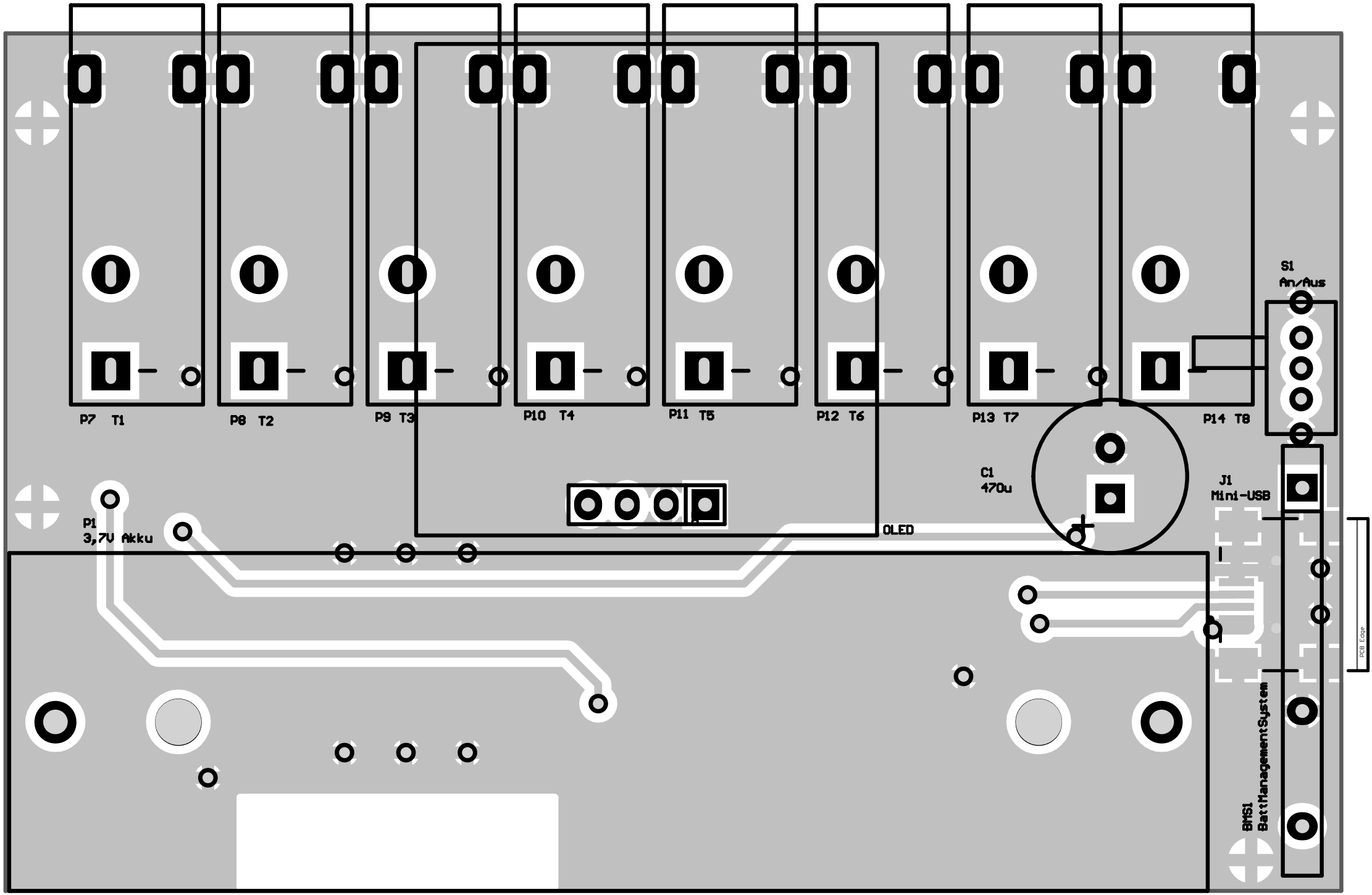
P7 T1
P8 T2
P9 T3
P10 T4
P11 T5
P12 T6
P13 T7
P14 T8
S1
An/Aus
C1
470u
J1
Mini-USB
P1
3,7V Akku
OLED
BMS1
BattManagementSystem
PCB Edge

Wifan Thermometer
03/17